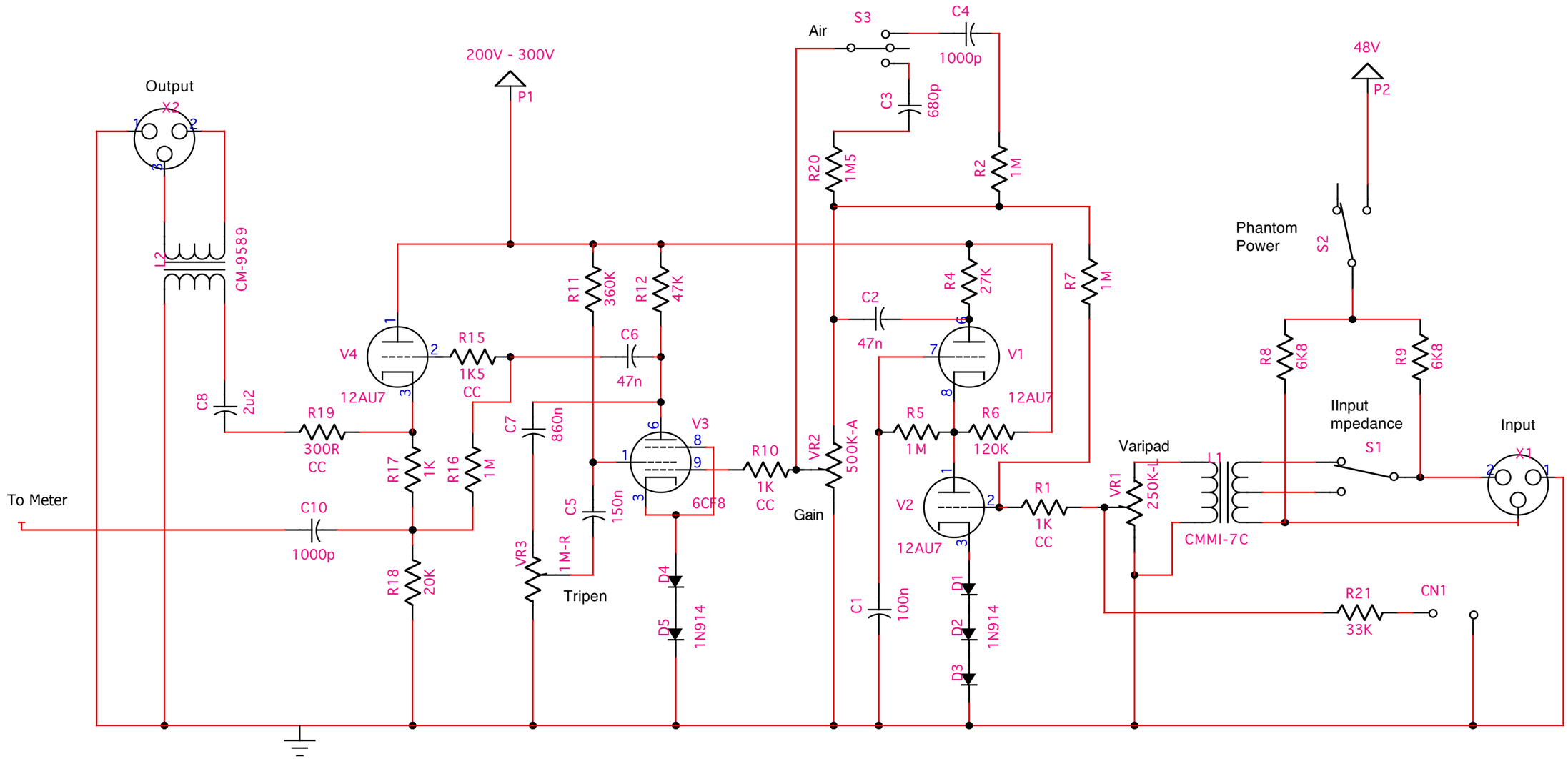

Please do not distribute this material but do provide links back to the Mark-O-Matic.com website to ensure the latest changes and updates. For informational purposes only no warranties expressed or implied.

MPAG-1D
Schematics
Copyright 2012
Mark-O-Matic LLC